# BODY

**Click on the applicable bookmark to selected the required model year**

# BODY

DOOR ASSEMBLY . . . . . 32
DOOR TRIM AND WATERPROOF FILM . . . . . 34
DOOR GLASS AND REGULATOR . . . . . 36
DOOR HANDLE AND LATCH . . . . . 40
WINDOW GLASS RUNCHANNEL AND DOOR OPENING WEATHERSTRIP . . . . . 43
REAR GATE . . . . . 44
SERVICE SPECIFICATION . . . . . 44
ON-VEHICLE SERVICE . . . . . 44
Rear Gate Outside Handle Play Check and Adjustment . . . . . 44
REAR GATE . . . . . 45

# BODY MOUNTING

42100370035

## CAB BODY

### REMOVAL AND INSTALLATION

<Single cab>

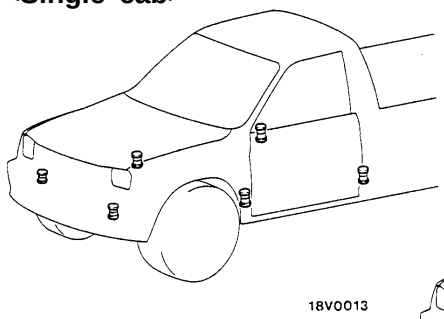


<Club cab>

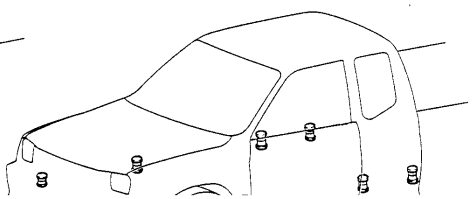

<Double cab>

A

1
3
4
5
6
7
10 N

47 Nm

B

1
3
4
5
6
7
10 N

47 Nm

C

11

24 Nm

1
3
11
9
10 N

47 Nm

D

1
3
4
5
6
7
10 N

24 Nm

47 Nm

E

2
8
11
9
■

24 Nm

47 Nm

## CAB BODY REMOVAL

1. Remove or disconnect the following parts.

- Hood
- Radiator grille
- Headlamp
- Front bumper assembly
- Front bumper bracket
- Oil cooler hose
- Radiator assembly
- Air cleaner duct
- Steering shaft joint
- Heater hose
- Power steering reservoir tank
- Brake booster vacuum hose
- Accelerator cable
- Fuel hose
- Brake pipe
- A/C piping
- Clutch release cylinder
- Speedometer cable
- Parking brake cable
- Shift lever knob
- Idle up vacuum hose
- Engine harness
- Transmission harness
- A/C harness
- Frame harness
- Ground strap
- Engine earth
- Door opening trim
- Floor carpet
- Cab body mounting bolt

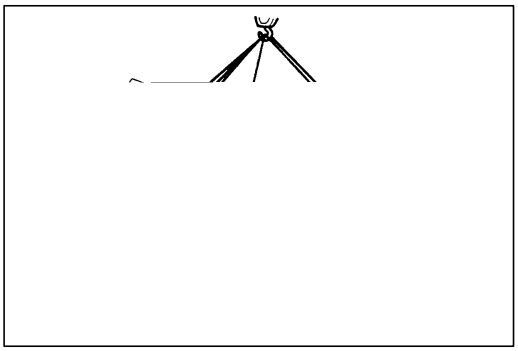

2. After removing the body mounting bolts and the body shims, insert wooden blocks to the body and gently lift with a crane.

   **Caution**
   **Before lifting, check to be sure that all the connections between cab body and frame and engine are separated.**
   **Connect sling wires to a suitable bar or frame, fitting protection covers as necessary.**

# REAR BODY

## REMOVAL AND INSTALLATION

<Single cab>

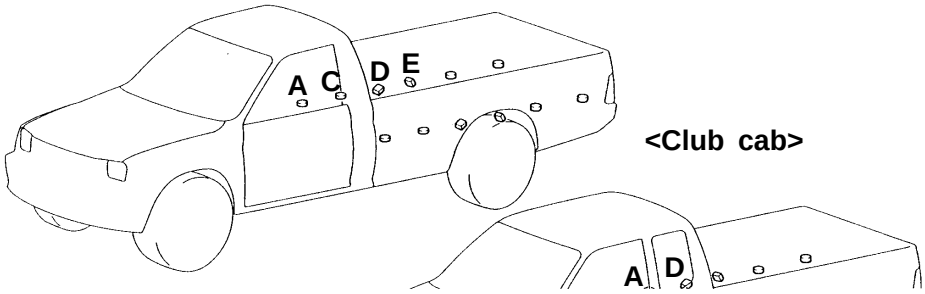


<Club cab>

<Double cab>

F

B

| A | B | C, F | D, E | G | H |
|---|---|---|---|---|---|
| 1 | 1 | | | | |
| 2 | 2 | | | 6 | |
| 3 | 4 | | | | |
| 5 N | 5 | | | | |
| 27 – 31 Nm | 27 – 31 Nm | 27 – 31 Nm | | | 27 – 31 Nm |

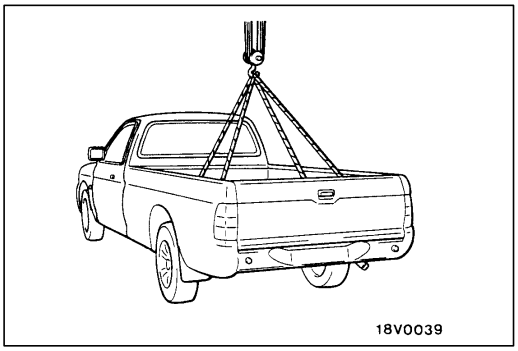


## REAR BODY REMOVAL

1. Remove or disconnect the following parts.
   - Filler neck <Single cab, Club cab>
   - Rear body wiring harness connector
   - Rear body mounting bolts
2. Hook wires onto the rope hocks on the rear body, and then use a crane to raise the rear body.

   **Caution**
   **Make sure that the rear body doesn't hit the cab while it is being raised.**

# HOOD

42100160137

## REMOVAL AND INSTALLATION

# FENDER

42100050090

## SEALANT

| Item | Specified sealant | Remark |
|---|---|---|
| Splash shield | 3M ATD Part No. 8625 or equivalent | Ribbon sealer |

## FENDER

### REMOVAL AND INSTALLATION

**CAUTION: SRS**
**When removing and installing the fender from the vehicles equipped with SRS, do not let it bump against the front impact sensor.**

**Pre-removal and Post-installation Operation**
- Front Bumper Removal and Installation (Refer to GROUP 51.)
- Front Deck Garnish Removal and Installation (Refer to GROUP 51 – Windshield Wiper and Washer.)

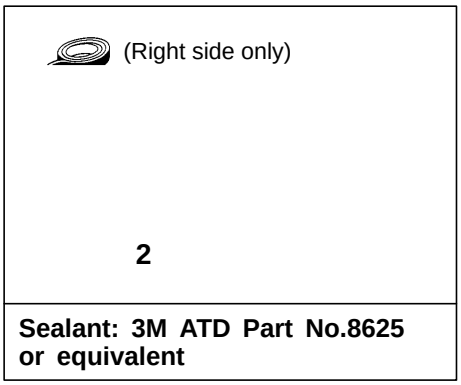


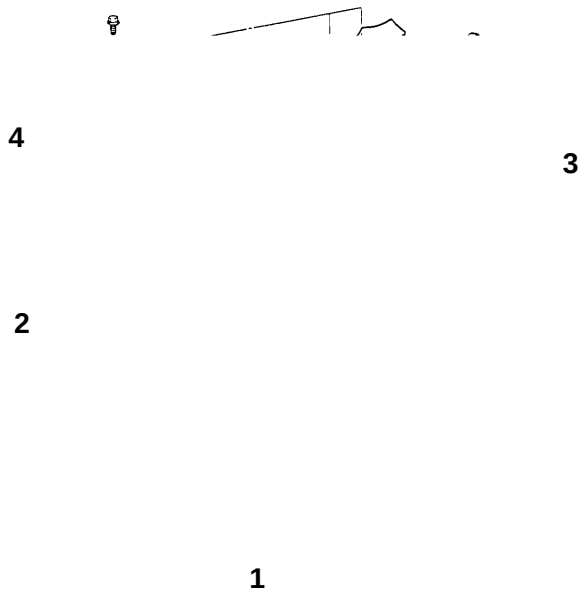


**Removal steps**
1. Mud guard
2. Splash shield
◀A▶ 3. Side turn signal lamp
4. Fender

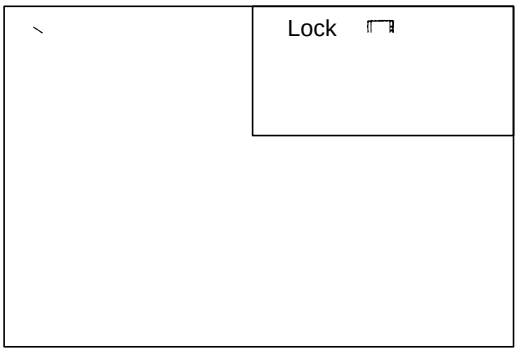


### REMOVAL SERVICE POINT

#### ◀A▶ SIDE TURN SIGNAL LAMP REMOVAL

Use a flat-tipped (–) screwdriver or similar tool to remove the lock from the fender panel, and remove the side turn signal lamp.

# FUEL FILLER DOOR

42100250148

## REMOVAL AND INSTALLATION

### <Single cab>

**Pre-removal and Post-installation Operation**

- Rear Floor Console Removal and Installation <Vehicles with heated seat> (Refer to GROUP 52A.)
- Driver's Seat Removal and Installation (Refer to GROUP 52A.)
- Scuff Plate (driver's side) Removal and Installation (Refer to GROUP 52A – Trims.)
- Rear Splash Shield (L.H.) Removal and Installation

1

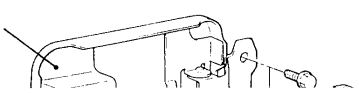

2

<R.H. drive vehicles>

3

<L.H. drive vehicles>

4

3

2

1

Fuel filler dour height and clearance adjustment

**Removal steps**

1. Fuel filler door panel assembly
2. Fuel filler door hook assembly
3. Lid lock release handle
4. Fuel filler door lock release cable

**<Club cab>**

**Pre-removal and Post-installation Operation**
- Rear Floor Console Removal and Installation <Vehicles with heated seat> (Refer to GROUP 52A.)
- Driver's Seat Removal and Installation (Refer to GROUP 52A.)
- Scuff Plate (driver's side) Removal and Installation (Refer to GROUP 52A – Trims.)
- Rear Splash Shield (L.H.) Removal and Installation

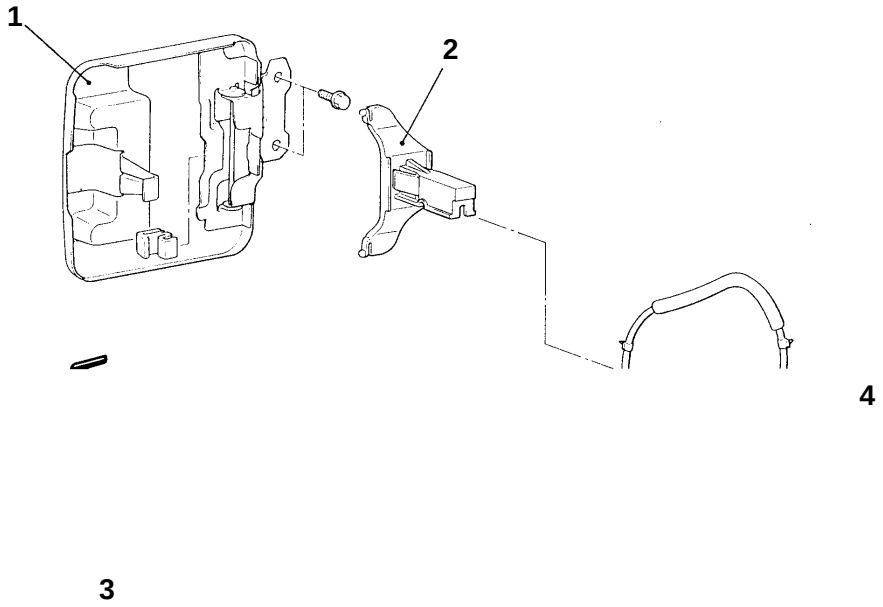


| | |
|---|---|
| 2 | 1 |
| | **Fuel filler door height and clearance adjustment** |

**Removal steps**

1. Fuel filler door panel assembly
2. Fuel filler door hook assembly
3. Lid lock release handle
4. Fuel filler door lock release cable

**<Double cab>**

**Pre-removal and Post-installation Operation**
- Rear Floor Console Removal and Installation <Vehicles with heated seat> (Refer to GROUP 52A.)
- Driver's Seat, Rear Seat Removal and Installation (Refer to GROUP 52A.)
- Front Scuff Plate (driver's side), Rear Scuff Plate (driver's side),Center Pillar Lower Trim (driver's side), Strap Assembly, ELR Cover, Back Panel Lower/Upper Trim, Rear Seat Belt ELR (L.H.), Rear Pillar Lower Trim Removal and Installation (Refer to GROUP 52A – Trims.)

3

2

4

5

1

1

**Fuel filler door height and clearance adjustment**

**Removal steps**

1. Fuel filler door panel assembly
2. Lid lock release handle
3. Fuel filler door lock release cable
4. Cable holder
5. Fuel filler door hook assembly

# WINDOW GLASS

42200050093

## ADHESIVES

| Items | Specified adhesives |
|---|---|
| Windshield | 3M ATD Part No. 8609 Super Fast Urethane Auto Glass Sealants or equivalent |

## SPECIAL TOOL

42200060089

| Tool | Number | Name | Use |
|---|---|---|---|
| 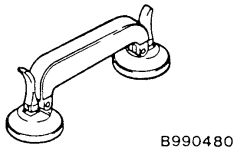  | MB990480 | Glass holder | Removal and installation of windshield |

## WINDOW REPAIR

42200560060

The following glass sections are installed by means of a liquid urethane adhesive method.

- Windshield

### ITEMS NEEDED

| Name | Remarks |
|---|---|
| Adhesive | 3M ATD Part No. 8609 Super Fast Urethane Auto Glass Sealant or equivalent |
| Primer | 3M ATD Part No. 8608 Super Fast Urethane Primer or equivalent |
| Spacers | Available as service part |
| Dam | Available as service part |
| Anti-rust solvent (or Tectyl 506T...Valvoline Oil Company) | For rust prevention |
| Isopropyl alcohol | For grease removal from bonded surface |
| Steel piano wire | Dia. × length...0.6mm × 1m For cutting adhesive |
| Adhesive gun | For pressing-out adhesive |

NOTE
The TEROSON 127.37V auto window sealer kit can also be used. If using the TEROSON 127.37V auto window sealer kit, follow the instructions in the manual included with the kit.

**HANDLING OF AUTO WINDOW SEALER**

Keep the sealant in a cool place, not exposed to the direct rays of the sun. Do not place any heavy article on the sealant nor press it, otherwise it will become deformed. Avoid storing the sealant for more than 6 months, because it will lose its sealing effect.

**BODY PINCH-WELD FLANGE SERVICING.**

# WINDSHIELD

42200100132

## REMOVAL AND INSTALLATION

**Pre-removal and Post-installation Operation**
- Front Deck Garnish Removal and Installation (Refer to GROUP 51.)
- Front Pillar Trim Removal and Installation (Refer to GROUP 52A.)
- Headlining

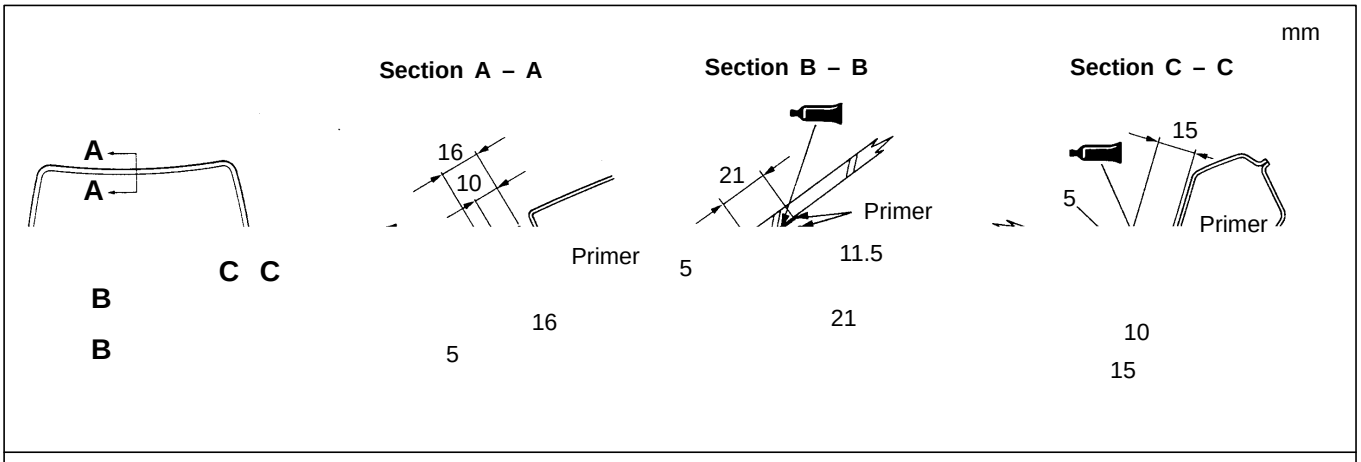


**Adhesive: 3M ATD Part No.8609 Super Fast Urethane Auto Glass Sealant or equivalent**

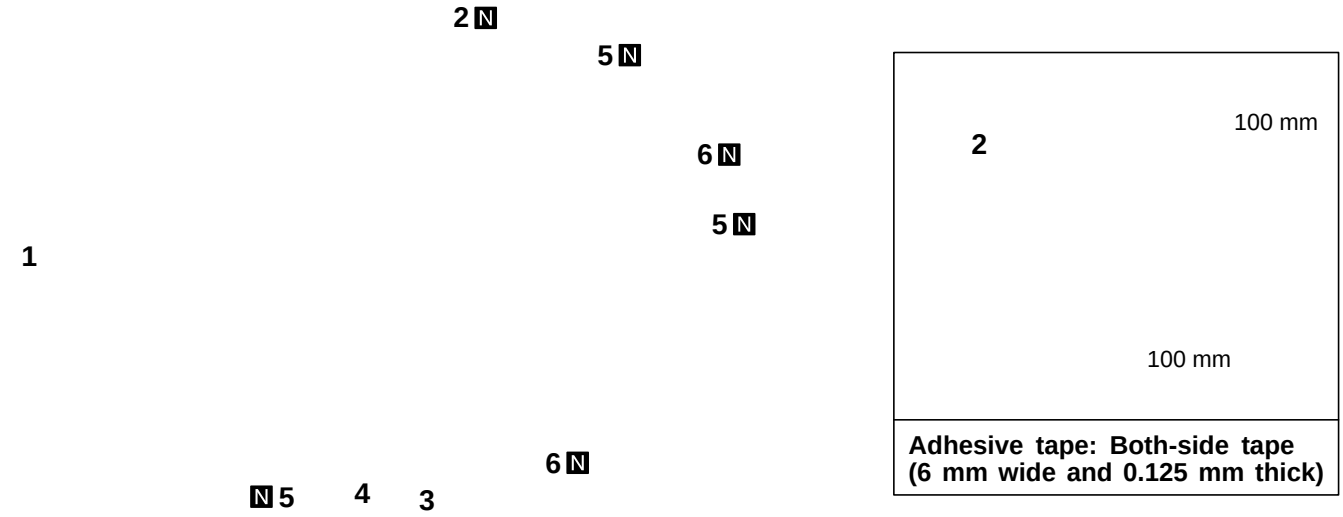


**Adhesive tape: Both-side tape (6 mm wide and 0.125 mm thick)**

**Removal steps**

◀A▶ ▶A◀ 1. Windshield
2. Windshield moulding
3. Windshield protector
4. Window spacer
5. Window spacer
▶A◀ 6. Dual lock fastener

## REMOVAL SERVICE POINT

### ◀A▶ WINDSHIELD REMOVAL

1. In order to protect the body (paint surface), apply cloth tape to all body areas around the installed windshield glass.
2. Cut the moulding with a cutter knife.

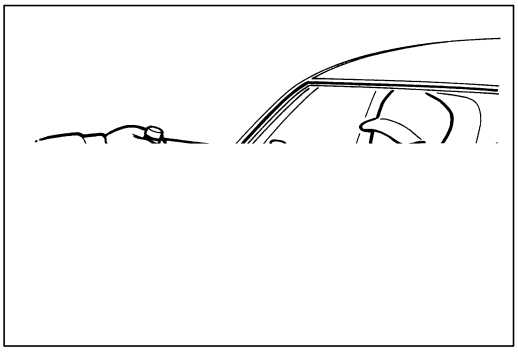

3. Using a sharp-point drill, make hole in the windshield glass adhesive.
4. Pass the piano wire from the inside of the vehicle through the hole.
5. Pull the piano wire alternately from the inside and outside along the windshield glass to cut the adhesive.

   **Caution**
   **Do not let the piano wire touch the edge of the windshield glass.**

6. Make mating marks on the windshield glass and body.

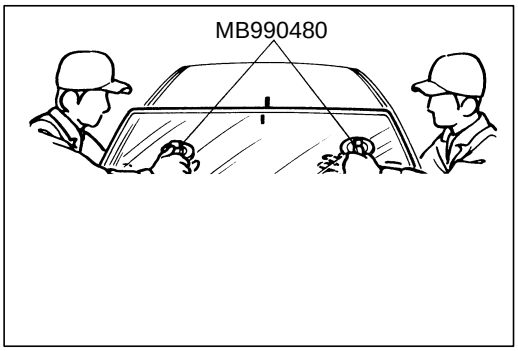


7. Use the special tool to remove the windshield glass.

8. Use a knife to cut away the remaining adhesive so that the thickness is within 2 mm around the entire circumference of the body flange.
9. Finish the flange surfaces so that they are smooth

   **Caution**
   **(1) Be careful not to remove more adhesive than is necessary.**
   **(2) Be careful also not to damage the paintwork on the body surface with the knife. If the paintwork is damaged, repair the damaged area with repair paint or anti-rust agent.**

10. When reusing the glass, remove the adhesive still adhering to the glass, and clean with isopropyl alcohol.
11. Clean the body side in the same way.

    **Caution**
    **Let the cleaned places stand for 3 minutes or more, and carry out the next procedures after they have dried. Also, do not touch any surface that has been cleaned.**

Dual lock fastener installation position

## INSTALLATION SERVICE POINTS

### ▶A◀ DUAL LOCK FASTENER/WINDSHIELD INSTALLATION

1. When replacing the glass, temporarily set the glass against the body, and place a mating mark on the glass and body.
2. Use isopropyl alcohol to degrease the inside and outside of the windshield glass and the body flanges.
3. Soak a sponge in the primer, and apply evenly to the glass and the body in the specified places.
4. Apply the primer, and then let it dry for 3 to 30 minutes.

   **Caution**
   **(1) The primer strengthens the adhesive, so be sure to apply it evenly around the entire circumference. However, a too thick application will weaken the adhesive.**
   **(2) Do not touch the coated surface.**
5. Install the dual lock fasteners to the windshield in the position shown in the illustration.
6. Install the dual lock fasteners to the body flange in the positions that are corresponding to those on the windshield.
7. Fill a sealant gun with adhesive. Then apply the adhesive evenly around the windshield within 30 minutes after applying the primer.

   NOTE
   Cut the tip of the sealant gun nozzle into a V shape to simplify adhesive application.
8. Align the mating marks on the glass and the body, and lightly press the windshield glass evenly so that it adheres completely.
9. Use a spatula or the like to remove any excessive adhesive. Then clean the surface with isopropyl alcohol. Try not to move the vehicle until the adhesive sets.
10. Wait 30 minutes or more, and then test for water leakage.

    **Caution**
    **(1) Do not move the vehicle unless absolutely necessary.**
    **(2) When testing for water leakage, do not pinch the end of the hose to spray the water.**

# REAR WINDOW GLASS

42200160079

## REMOVAL AND INSTALLATION

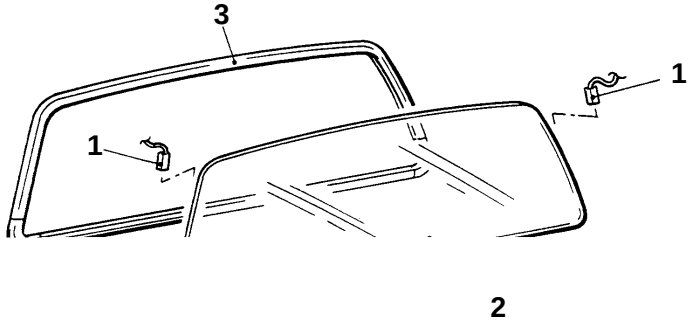


**Removal steps**

1. Harness connector <Vehicles with rear window defogger>
◀A▶ ▶A◀ 2. Rear window glass
◀A▶ ▶A◀ 3. Rear window glass weatherstrip

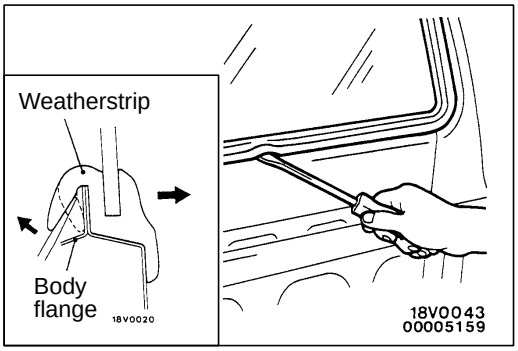


### REMOVAL SERVICE POINT

**◀A▶ REAR WINDOW GLASS/REAR WINDOW GLASS WEATHERSTRIP REMOVAL**

Push the rear window glass out from the inside of the cabin with the lip of the weatherstrip straightened along the entire periphery with a screwdriver.

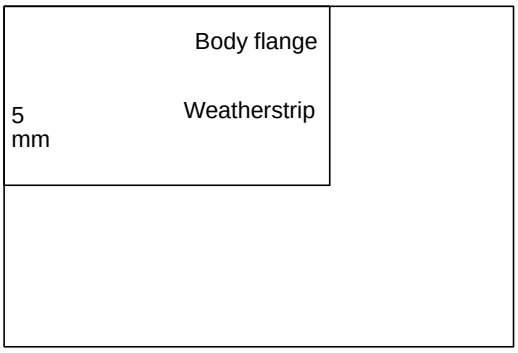


### INSTALLATION SERVICE POINT

**▶A◀ REAR WINDOW GLASS WEATHERSTRIP/REAR WINDOW GLASS INSTALLATION**

1. Set round strings in the weatherstrip groove.

   NOTE
   Make certain that the strings overlap other at both ends.

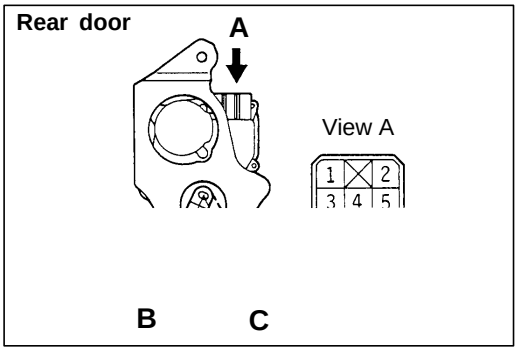


## REAR DOOR LOCK ACTUATOR CHECK <Vehicles with central door locking system>

42300620068

| Rod position | Terminal No. | | Rod operation |
|---|---|---|---|
| | 1 | 2 | |
| B | ⊕ | ⊖ | B position → C position |
| C | ⊖ | ⊕ | C position → B position |

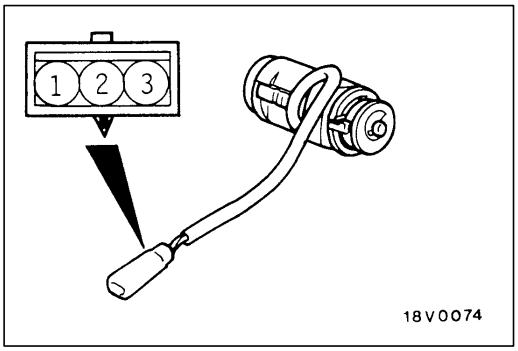


## DOOR LOCK KEY CYLINDER SWITCH CONTINUITY CHECK <Vehicles with central door locking system>

42300630092

### Passenger's side only

| Switch position | Terminal No. | | |
|---|---|---|---|
| | 1 | 2 | 3 |
| LOCK | ○ | ○ | |
| Neutral (OFF) | | | |
| UNLOCK | | ○ | ○ |

# WINDOW GLASS RUNCHANNEL AND DOOR OPENING WEATHERSTRIP

42300310125

## REMOVAL AND INSTALLATION

**Front door**

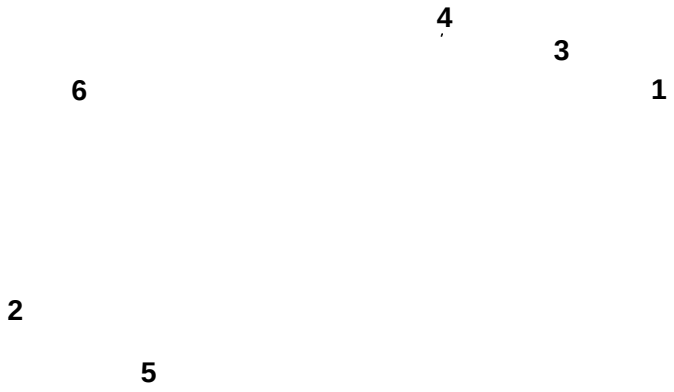


**Rear door**

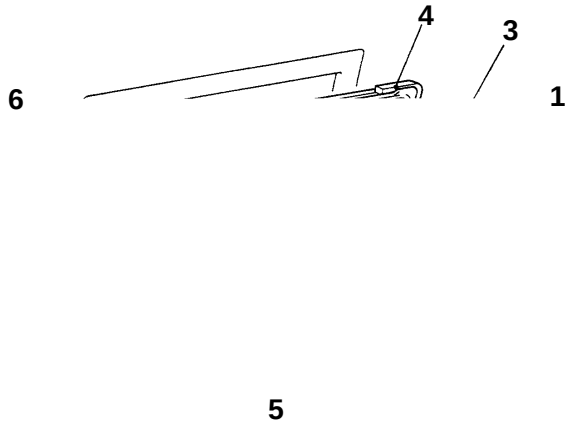


**Door inner opening weatherstrip removal steps <Vehicles with map lamp>**

- Front scuff plate (Refer to GROUP 52A – Trims.)
- Rear scuff plate (Refer to GROUP 52A – Trims.)
- Centre pillar lower trim (Refer to GROUP 52A – Trims.)
- Cowl side trim (Refer to GROUP 52A – Trims.)

1. Door inner opening weatherstrip

**Door outer opening weatherstrip removal**

2. Spring pin

◀A▶ ▶A◀ 3. Door outer opening weatherstrip

**Window glass runchannel removal**

4. Window glass runchannel

**Door beltline inner weatherstrip removal steps**

- Door trim (Refer to P.42-34, 35.)

5. Door beltline inner weatherstrip

**Door beltline outer weatherstrip removal steps**

- Door mirror (Refer to GROUP 51.)

6. Door beltline outer weatherstrip

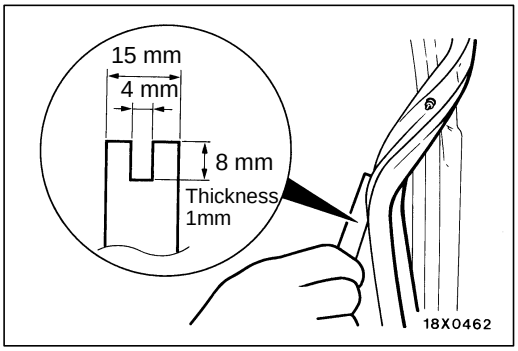


## REMOVAL SERVICE POINT

### ◀A▶ DOOR OUTER OPENING WEATHERSTRIP REMOVAL

Make a tool as shown in the illustration to remove the door opening weatherstrip.

## INSTALLATION SERVICE POINT

### ▶A◀ DOOR OUTER OPENING WEATHERSTRIP INSTALLATION

The clip colour identifies the left and right weatherstrips, so be sure to use the colours so as to install correctly.

| Applicable side | Identification colour |
|---|---|
| Left door | Brown |
| Right door | Natural |

# REAR GATE

42500030010

## SERVICE SPECIFICATION

| Item | Standard value |
|---|---|
| Tailgate handle play mm | 1 – 3 |

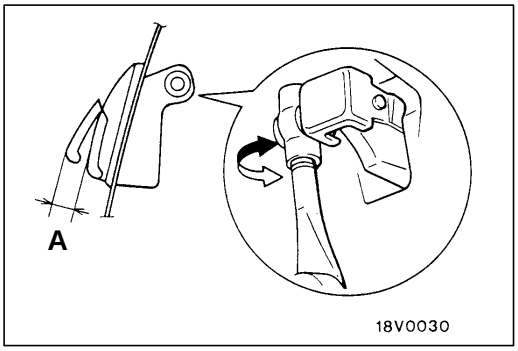


## ON-VEHICLE SERVICE

42500090018

### REAR GATE OUTSIDE HANDLE PLAY CHECK AND ADJUSTMENT

Check that play is within the standard value. If not within the standard value, adjust as follows.

1. Remove the rear gate panel.
2. Remove the outside handle rod from outside handle. Turn upper rod to adjust outside handle play.

   **Standard value (A): 1 – 3 mm**

# REAR GATE

42500170019

## REMOVAL AND INSTALLATION

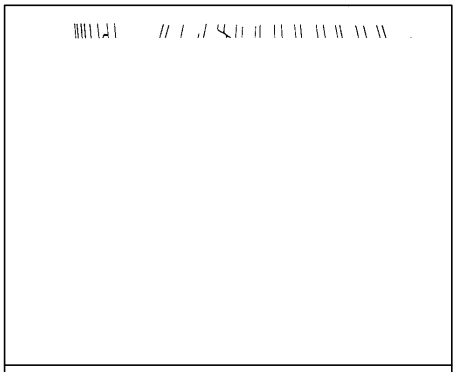

Rear gate height adjustment

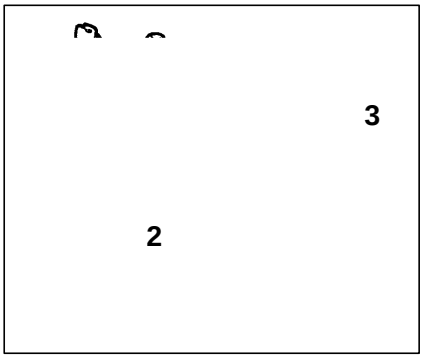


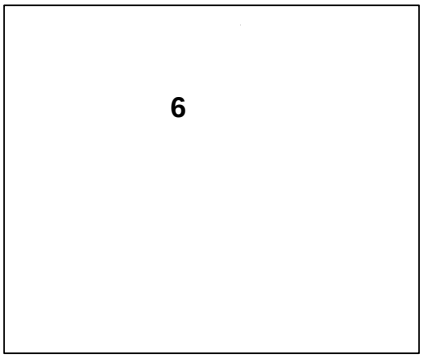


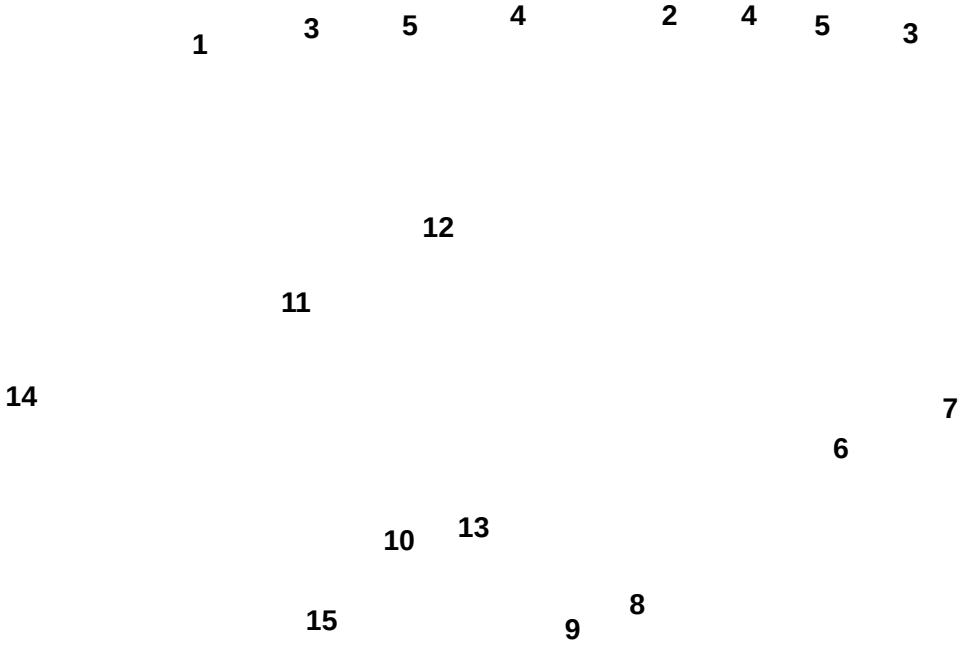


**Removal steps**

1. Rear gate panel
2. Remote control assembly
3. Latch assembly
4. Cushion
5. Cushion
   <Club cab, Double cab>
6. Outside handle
7. Rear gate
8. Rear gate hinge
9. Shim
10. Rear gate link assembly
11. Spacer
12. Link hook
13. Rear gate link damper (A)
14. Rear gate link damper (B)
15. Cushion rubber

## NOTES

# SERVICE BULLETIN

**QUALITY INFORMATION ANALYSIS**
**OVERSEAS SERVICE DEPT. MITSUBISHI MOTORS CORPORATION**

MOTORS

| | | | |
|---|---|---|---|
| **SERVICE BULLETIN** | **No.:** [illegible]-00[illegible]0-003 | | |
| | **Date:** 2000-05-30 | **<Model>** | **<M/Y>** |
| **Subject:** [illegible]2001 [illegible]200 ([illegible]200([illegible]0, [illegible]0) 00-10 | | | |
| **Group:** [illegible]L | **Draft No.:** 00[illegible]022915 | | |
| **INFORMATION/ CORRECTION** | **INTERNATIONAL CAR ADMINISTRATIO OFFICE** | [illegible] | |

**1. Description:**

[illegible]2001 [illegible]200

**2. Applicable Manuals:**

| Manual | Pub. No. | Language | Page(s) |
|---|---|---|---|
| 2000 [illegible]200 [illegible] | [illegible]E-D | ([illegible] | |
| | | | |
| | [illegible]E-D | ([illegible] | |
| | [illegible]E-D | ([illegible] | |

**3. Details:**

# L200

# WORKSHOP MANUAL SUPPLEMENT


General ..... 00

Engine Lubrication ..... 12

Body ..... 42

Interior and Supplemental Restraint System (SRS) ..... 52

Chassis Electrical ..... 54


## FOREWORD

[illegible]

[illegible]

[illegible]

# GROUP 00
# GENERAL

## VEHICLE IDENTIFICATION

### MODELS

| [illegible] | [illegible] | [illegible] | [illegible] | [illegible] |
|---|---|---|---|---|
| K2T | [illegible] | 463-[illegible] (1,997m [illegible] | [illegible]VA/T | [illegible] |
| | [illegible] | | [illegible] (2[illegible]/T | |
| K4T | [illegible] | 456 (2,477m " ) | [illegible] (2[illegible]T [illegible] | |
| | [illegible] | | | |
| | [illegible] | | | |
| | [illegible] | | | |
| K5T | [illegible] | 464-[illegible] (2,351 m " ) | [illegible] (4[illegible]/T [illegible] | |
| | [illegible] | | | |
| K4T | [illegible] | 456- [illegible] (2,477m " ) | [illegible] (4[illegible]/T | [illegible] |
| | [illegible] | | | |
| | [illegible] | [illegible]VA2V(A[illegible]VA/T | | |
| | [illegible] | | [illegible] (4[illegible]/T | |
| | [illegible] | | | |
| | [illegible] | | | |
| | [illegible] | | | |
| | [illegible] | | | |
| | [illegible] | | | |
| | [illegible] | | | |
| | [illegible] | | | |

## CHASSIS NUMBER

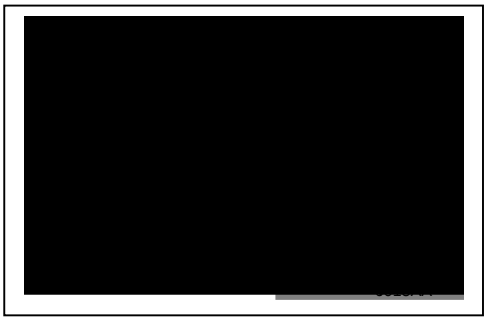

| [illegible] | [illegible] | [illegible] | |
|---|---|---|---|
| 1 | [illegible] M [illegible] | [illegible] | |
| 2 | [illegible] M [illegible] | [illegible] | |
| 3 | [illegible] B [illegible] | | |
| 4 | [illegible] | C [illegible] | |
| | | J [illegible] | |
| | | O [illegible] | |
| | | Y [illegible] | |
| | | Z [illegible] | |
| 5 | [illegible] | N 5-[illegible] | |
| | | R 4-[illegible] | |
| 6 | [illegible] K [illegible] | [illegible]00 | |
| 7 | [illegible] | 6 | [illegible] |
| | | 7 | 4[illegible] |
| 8 | [illegible] | 2 | 46[illegible]3: 1,997m [illegible] |
| | | 4 | 45[illegible]6:2,477m [illegible] |
| | | 5 | 46[illegible]4: 2,351 m [illegible] |
| 9 | [illegible] A A, B, [illegible]. | | 0 ([illegible] |
| 10 | [illegible] 1* | 2001 | |
| 11 | [illegible] A | A, [illegible] | [illegible] |
| 12 | [illegible] - - | | |

[illegible]

*: [illegible]

## NOTES

GROUP 12

# ENGINE LUBRICATION

## GENERAL

### OUTLINE OF CHANGES

- A [redacted]

[redacted]

### ON-VEHICLE SERVICE

**specified engine oil (ACEA and API classification):**
**<4G6> ACEA A1, A2, A3/API SG or higher**
**<4D5> ACEA B1, B2, B3, B4/API CD or higher**

## NOTES

GROUP 42

# BODY

## GENERAL

### OUTLINE OF CHANGES

[illegible]

## KEYLESS ENTRY SYSTEM

### SPECIAL TOOL

| [illegible] | [illegible] | [illegible] | |
|---|---|---|---|
| 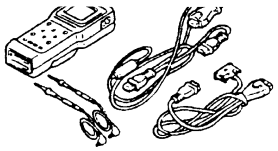 | | | |

A180210

3. [illegible]
4. [illegible]
5. [illegible]
6. [illegible]
7. [illegible]
   - [illegible]
   - [illegible]
   - [illegible]
   - [illegible]
8. [illegible]
   - [illegible]
   - [illegible]

# KEYLESS ENTRY SYSTEM

## REMOVAL AND INSTALLATION

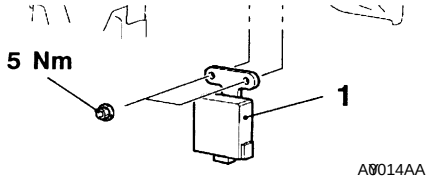


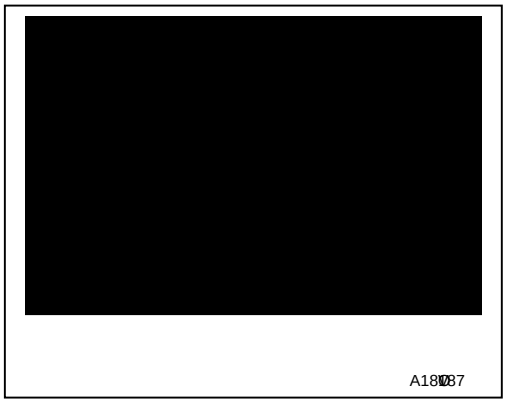


**Keyless entry receiver-ECU removal steps**

- [redacted]2A*.)

1. [redacted]

**ETACS-ECU removal**

2. [redacted]

[redacted]

*: [redacted]97 200 [redacted]
[redacted]

# GROUP 52A
# INTERIOR

## GENERAL
### OUTLINE OF CHANGE

- [illegible]
- [illegible]

## FRONT SEAT BELT
### REMOVAL AND INSTALLATION

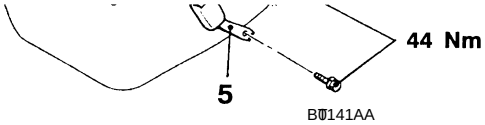


**Outer seat belt removal steps**

- [illegible] (52A*.)

1. [illegible]
2. [illegible]
3. [illegible] (52A*.)
4. [illegible]

**Inner seat belt removal steps**

- [illegible] (52A*.)

5. [illegible]

*: [illegible] 200 [illegible]

## NOTES

# GROUP 54
# CHASSIS ELECTRAL

## GENERAL
### OUTLINE IF CHANGES
- [illegible]

## HIGH-MOUNTED STOP LAMP
### REMOVAL AND INSTALLATION

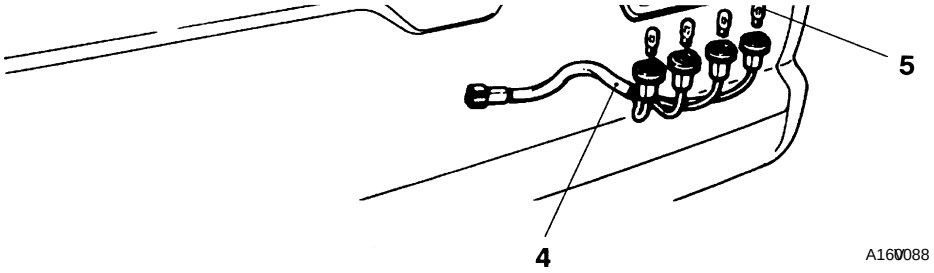


**Removal steps**
1. [illegible]
2. [illegible]
3. [illegible]
4. [illegible]
5. [illegible]